800V G2 Silicon Carbide Power MOSFET

N-Channel Enhancement Mode

V_{DS}	=	800V
$R_{DS(ON)}$	=	800mΩ
$I_{D(MAX)@25^{\circ}C}$	=	5A

Features

- High blocking voltage with low on-resistance
- High speed switching with low capacitances
- Very low switching losses
- Avalanche ruggedness
- Temperature independent turn-off switching losses
- Integrated lumped gate resistance
- Robust against parasitic turn-on even at 0V turn-off gate voltage

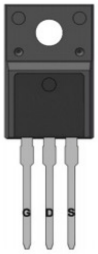

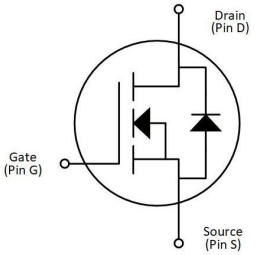

Benefits

- Higher system efficiency
- Reduce cooling requirements
- Increase power density
- Increase system switching frequency

Applications

- PD Charger
- High voltage DC/DC converters
- Switch mode power supplies
- EV battery chargers
- PV inverters

Part number	Package Type
CC3M80080F	TO-220F-3L

Maximum Ratings (T_C=25˚C unless otherwise specified)

Symbol	Parameter	Value	Unit	Test Conditions
V_{DSmax}	Drain - Source Voltage	800	V	V_{GS} = 0V, I_D = 100μA
V_{GSmax}	Gate - Source Voltage	-10 /+22	V	Absolute maximum values
V_{GSop}	Gate - Source Voltage	0 /+18	V	Recommended operational values
I_D	Continuous Drain Current	5	A	V_{GS} = 18V, T_C = 25˚C
		4		V_{GS} = 18V, T_C = 100˚C
$I_{D(pluse)}$	Pulsed Drain Current	16	A	Pulse width t_P limited by $T_{j,max}$
P_D	Power Dissipation	23	W	T_C = 25˚C, T_J = 175˚C
T_J, T_{stg}	Operating Junction and Storage Temperature	-55 to +175	˚C	/
T_L	Soldering Temperature	260	˚C	1.6mm (0.063”) from case for 10s

Electrical Characteristics (T_C = 25˚C unless otherwise specified)

Symbol	Parameter	Min.	Typ.	Max.	Unit	Test Conditions
$V_{(BR)DSS}$	Drain-Source Breakdown Voltage	800	-	-	V	V_{GS} = 0V, I_D = 100μA
$V_{GS(th)}$	Gate Threshold Voltage	2.0	3.0	4.0	V	V_{DS} = V_{GS}, I_D = 1mA
		-	2.1	-		V_{DS} = V_{GS}, I_D = 1mA T_J = 175˚C
I_{DSS}	Zero Gate Voltage Drain Current	-	1	10	μA	V_{DS} = 650V, V_{GS} = 0V
I_{GSS}	Gate-Source Leakage Current	-	-	200	nA	V_{GS} = 22V, V_{DS} = 0V
		-200	-	-	nA	V_{GS} = -10V, V_{DS} = 0V
$R_{DS(on)}$	Drain-Source On-State Resistance	-	640	800	mΩ	V_{GS} = 18V, I_D = 3A
		-	768	-		V_{GS} = 18V, I_D = 3A T_J = 175˚C
g_{fs}	Transconductance	-	1.3	-	S	V_{DS} = 10V, I_D = 3A
		-	-	-		V_{DS} = 10V, I_D = 3A T_J = 175˚C
C_{iss}	Input Capacitance	-	221	-	pF	V_{DS} = 400V V_{GS} = 0V f = 1MHz, V_{AC}=25mV
C_{oss}	Output Capacitance	-	17	-		
C_{rss}	Reverse Transfer Capacitance	-	0.9	-		
E_{oss}	C_{oss} Stored Energy	-	2.1	-	μJ	
E_{ON}	Turn-On Switching Energy	-	183	-	μJ	V_{DS} = 400V V_{GS} = 0/+18V, I_D = 3A R_G = 2.5Ω L=100μH
E_{OFF}	Turn-Off Switching Energy	-	16	-		
$t_{d(on)}$	Turn-On Delay Time	-	8	-	ns	
t_r	Rise Time	-	41	-		
$t_{d(off)}$	Turn-Off Delay Time	-	16	-		
t_f	Fall Time	-	80	-		
$R_{g(int)}$	Internal Gate Resistance	-	8	-	Ω	V_{AC}=25mV, f = 1MHz
Q_{gs}	Gate to Source Charge	-	3.7	-	nC	V_{DS} = 400V V_{GS} = 0/+18V, I_D = 3A
Q_{gd}	Gate to Drain Charge	-	11	-		
Q_g	Total Gate Charge	-	15	-		

Reverse Diode Characteristics (T_C = 25˚C unless otherwise specified)

Symbol	Parameter	Typ.	Max.	Unit	Test Conditions
V_{SD}	Diode Forward Voltage	3.4	-	V	V_{GS} = 0V, I_{SD} = 1.5A
		3.1	-		V_{GS} = 0V, I_{SD} = 1.5A T_J = 175˚C
I_{SD}	Continuous Diode Forward Current	-	5	A	V_{GS} = 0V
		-	3		V_{GS} = 0V, T_C = 100˚C
t_{rr}	Reverse Recover Time	7	-	ns	V_{DD} = 400V, V_{GS} = 0V I_{SD} = 3A di/dt = 1000A/μs
Q_{rr}	Reverse Recovery Charge	15	-	nC	
I_{rrm}	Peak Reverse Recovery Current	3	-	A	

Thermal/Package Characteristics

Symbol	Parameter	Typ.	Unit
$R_{\theta JC}$	Thermal Resistance, Junction to Case	6.4	˚C/W

Package Dimensions

TO-220F-3L Package Outline

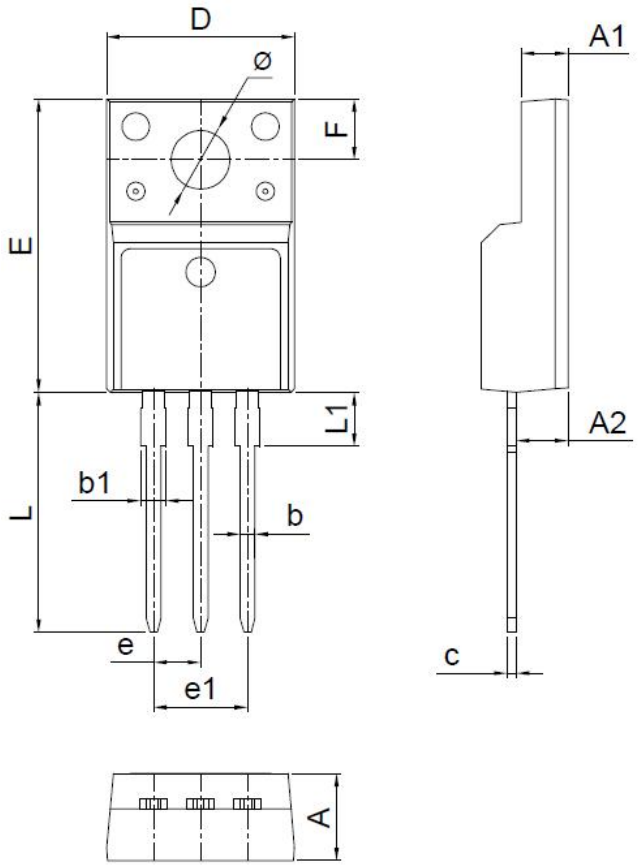

SYMBOL	MIN.	TYP	MAX.
A	4.50	4.70	4.90
A1	2.34	2.54	2.74
A2	2.66	2.76	2.86
b	0.75	0.80	0.85
b1	1.24	1.34	1.44
c	0.40	0.50	0.60
D	10.00	10.16	10.32
E	15.75	15.90	16.05
e	2.44	2.54	2.64
e1	4.88	5.08	5.26
F	3.10	3.30	3.50
L	12.90	13.20	13.50
L1	2.90	3.10	3.30
Φ	3.10	3.20	3.30

Revision History

Document Version	Date of Release	Brief Summary
Rev.0.1	2026-10-09	Draft.

Notes & Disclaimer

- This document and the information contained herein are subject to change without notice. Any such change shall be evidenced by the publication of an updated version of this document by CLASSICC HIPNocommunication from any employee or agent of CLASSICCHIPor any third party shall effect a n amendmentor modification of this documentNo responsibility is assumed by CLASSICCHIPfor a ny infringement of
  patents or other rights of third parties which may result from use of the information contained herein.
- No license is granted by implication or otherwise under any patent or patent rights of CLASSICCHIP.
- We assume no responsibility for equipment failures that result from using products at values that exceed, even momentarily, rated values (such as maximum ratings, operating condition ranges, or other parameters) listed in products specifications of any and all products described or contained herein.Notwithstanding any application-specific information, guidance, assistance,
  or support that CLASSICCHIP may provide,
  the buyer of this product is solely responsible for determining the suitability of this
  product for the buyer's purposes, including without limitation for use in the applications identified in the next bullet point, and for the compliance of the buyers' products, including those that incorporate
- this product, with all applicable legal, regulatory, and safety-related requirements.
  This product has not been designed or tested for use in, and is not intended for use in, applications in which failure of the product would reasonably be expected to cause death, personal injury, or property damage, including but not limited to equipment implanted into the human body, life-support machines, cardiac defibrillators, and similar emergency medical equipment, aircraft navigation, communication, and control systems, aircraft power and propulsion systems, air traffic control systems, and equipment used in the planning, construction, maintenance, or operation of nuclear facilities.

- **RoHS Compliance**
  The levels of RoHS restricted materials in this product are below the maximum concentration values (also referred to as the threshold limits) permitted for such substances, or are used in an exempted application, in accordance with EU Directive 2011/65/EC (RoHS2), as implemented January 2, 2013.
- **REACh Compliance**
  REACh substances of high concern (SVHCs) information is available for this product. Since the European Chemical Agency (ECHA) has published notice of their intent to frequently revise the SVHC listing for the foreseeable futureplease contact your CLASSICCHIPrepresentative to ensure you ge t themost up-to-date REACh SVHC Declaration.
  REACh banned substance information is also available upon request.